DUCKSAN 19" CGA MONITOR PCB ASSY PARTS LOCATION

MAIN PCB

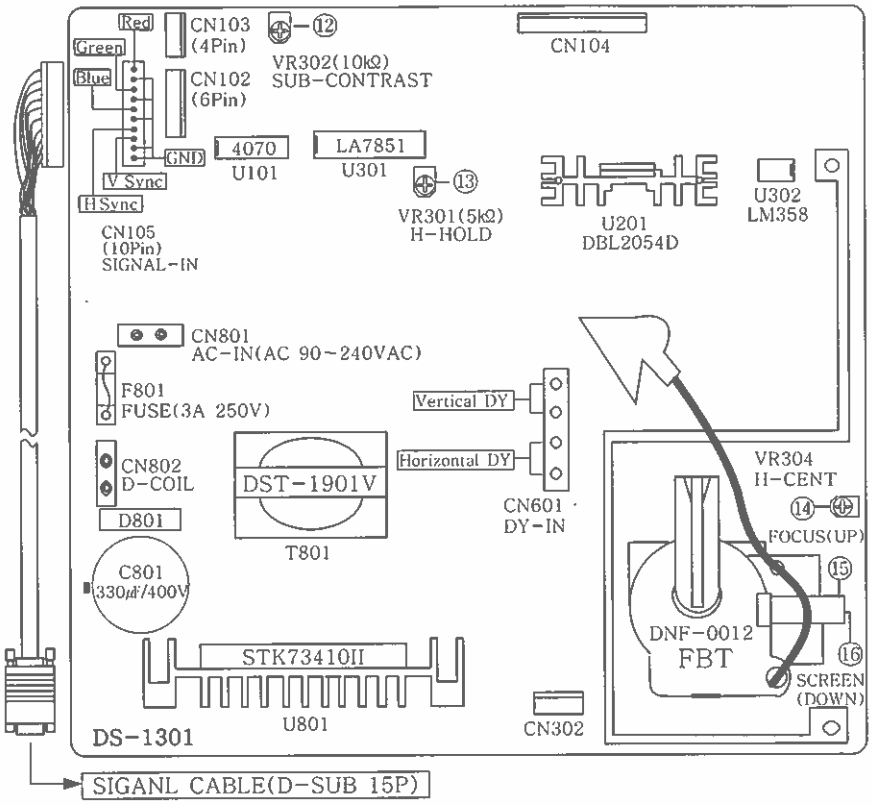

SIGANL CABLE(D-SUB 15P)

CPT PCB

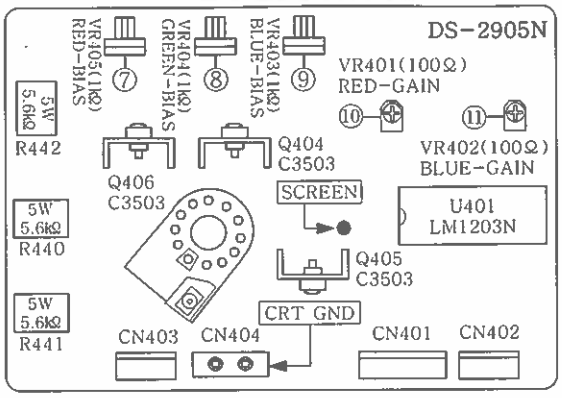

CONTROL PCB

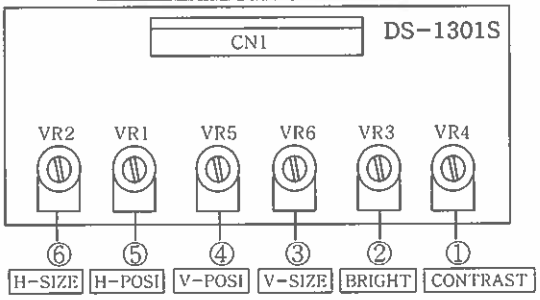
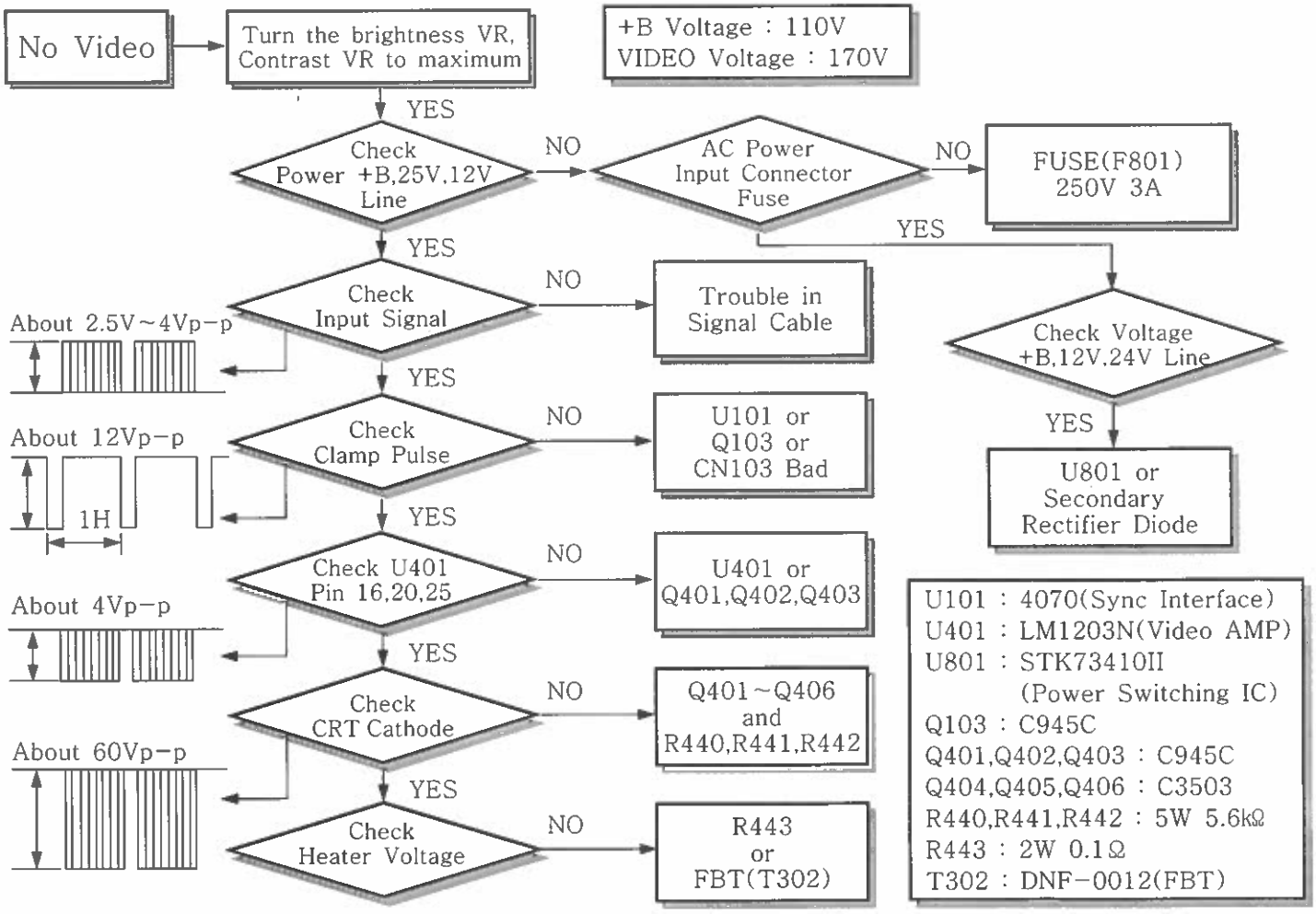
TROUBLE-SHOOTHING CHART